MERCRUISER (5.7LX BRAVO EFI (GEN+) GM 350 V-8 1996)
Serial Nbr Range: 0F800300 THRU 0K001508 ()

WIRING HARNESS (ENGINE)

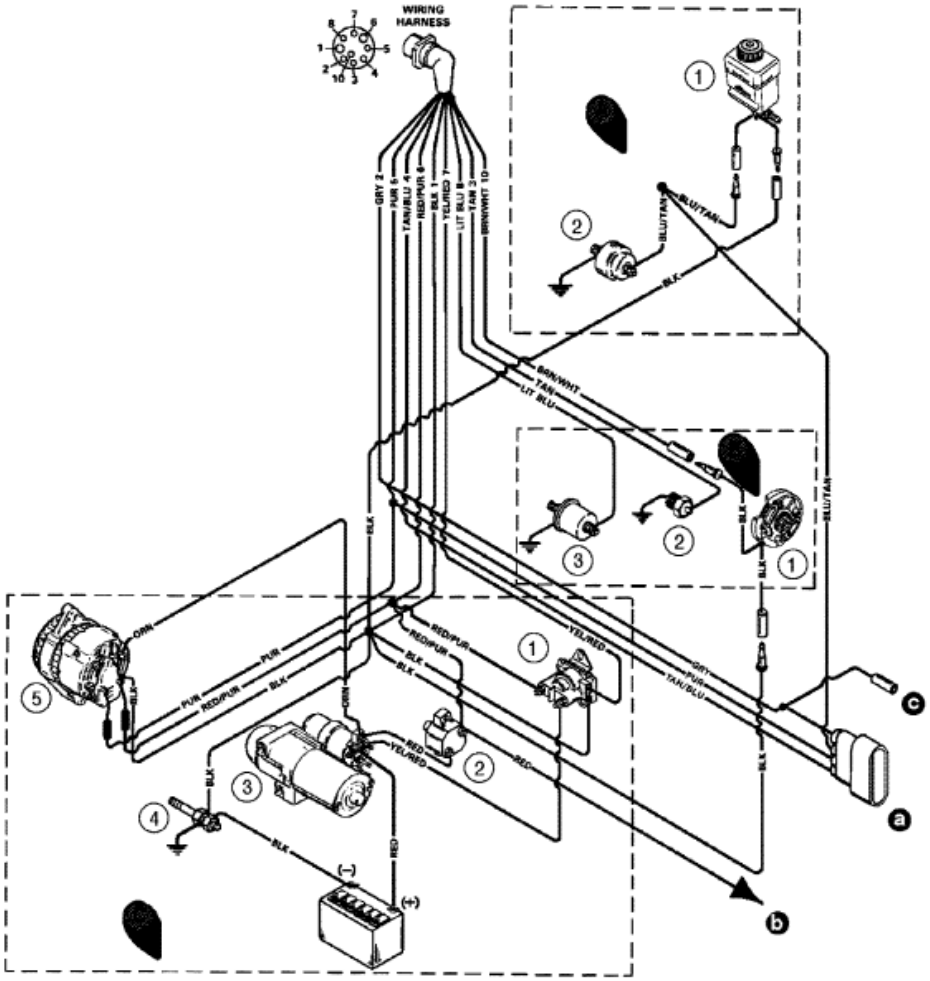

Parts List

Ref	Class	Part	Description	Qty	Comment	Footnote
-	84	806656A 6	WIRING HARNESS-ENGINE	1		